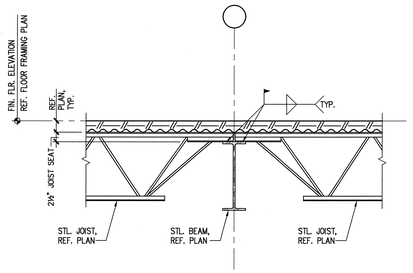

1

SCALE: ¼" = 1'-0" U.N.O.

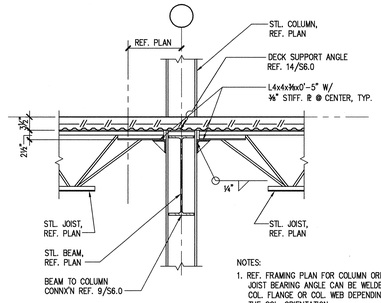

2

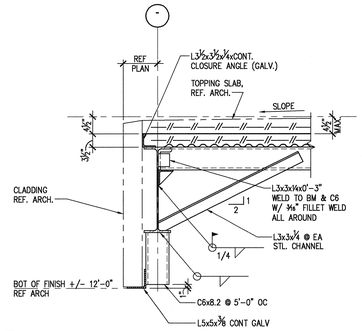

3

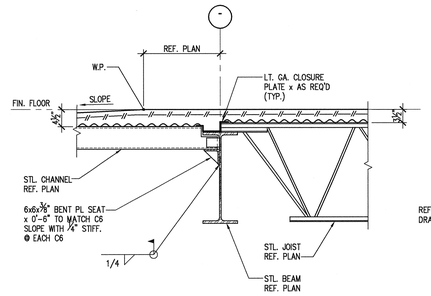

4

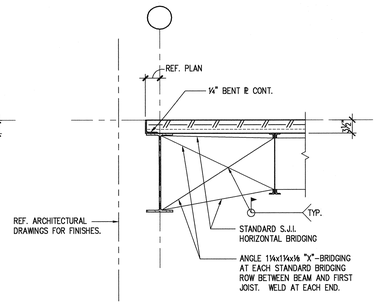

5

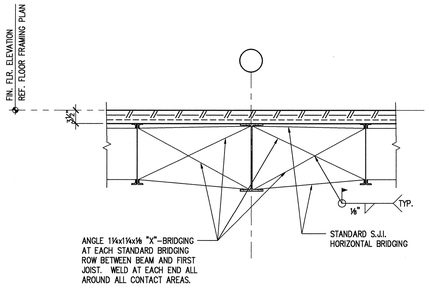

6

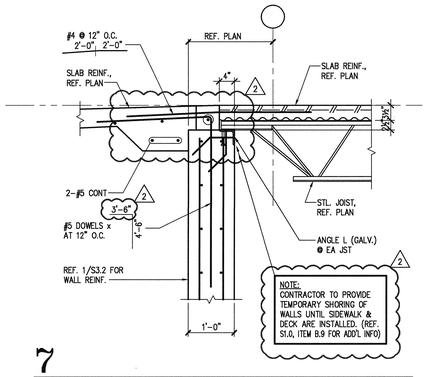

7

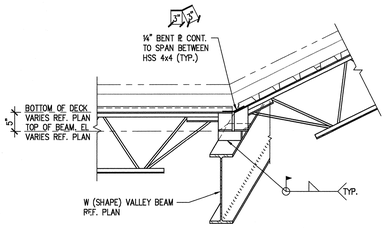

8

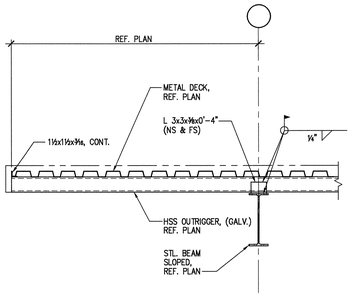

9

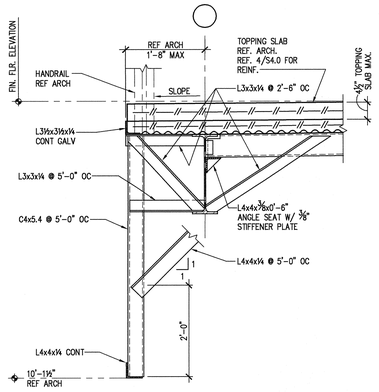

10

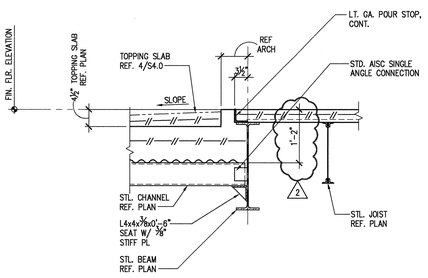

11

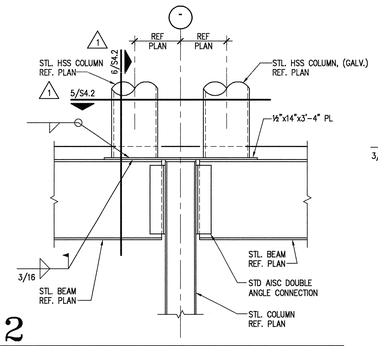

12

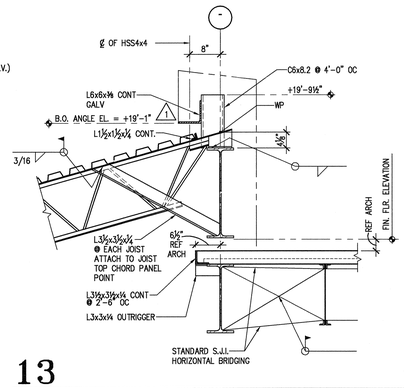

13

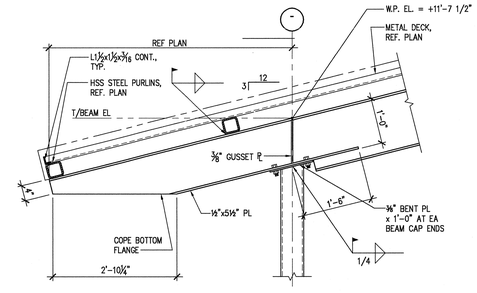

14

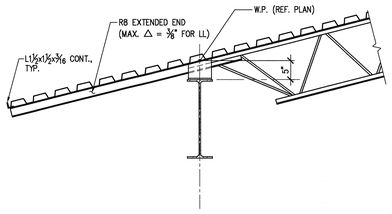

15

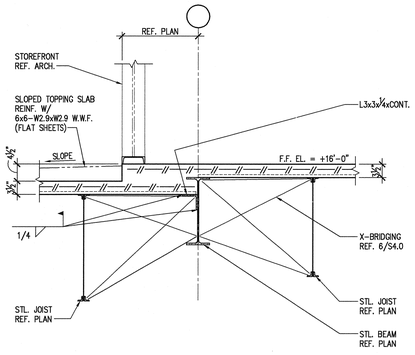

16

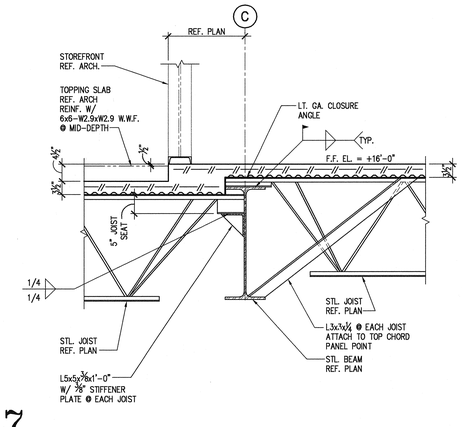

17

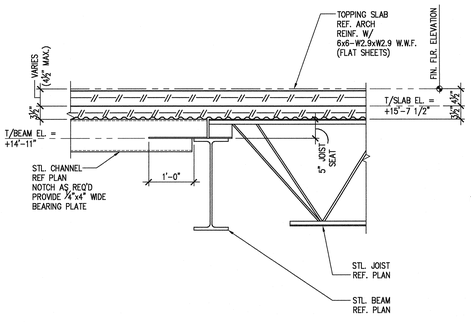

18

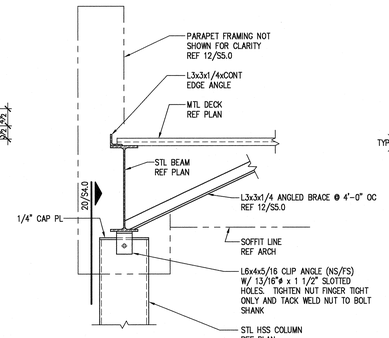

19

*NOTE:
SOFFIT AND PARAPET FRAMING NOT SHOWN FOR CLARITY
REF 12/S5.0 FOR INFORMATION

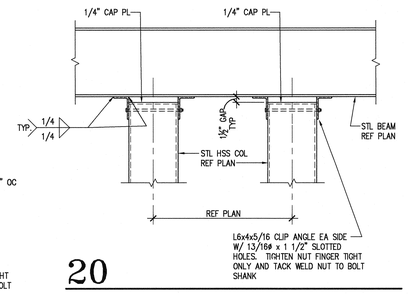

20

HAYNESWHALEY ASSOCIATES
Structural Engineering
HOUSTON • AUSTIN • RESTON
haynes whaley.com
HWA• 2005-2106-03

SUSMAN TISDALE GAYLE
ARCHITECTURE • PLANNING • INTERIORS
AUSTIN • NASHVILLE

TEL 512.899.3500
FAX 512.899.3501
4330 S. MOPAC EXPWY
SUITE ONE HUNDRED
AUSTIN TEXAS 78735
www.stgarch.com

© 2006 SUSMAN TISDALE GAYLE - ALL RIGHTS RESERVED

R. MARK MERRIMAN
77869
11-2-07

LADERA BEND

PACKAGE B
RETAIL BUILDING

Project	16-5236-00
Drawn	CJR
Quality Control	
Project Director	

Issues

0	CONSTRUCTION	02-07-07
1	P.R. #1	04-23-07
2	P.R. #5	11-02-07

FLOOR FRAMING DETAILS

S4.0